I.AM

I.AM is a totally flexible and versatile table base that provides a complete family of product options for the commercial environment.

sof
sydney office furniture

Multi-Leg Finishes

1. Frame Finishes

Standard I.AM frame finishes include black or chrome legs with a polished foot. I.AM is also available in our current season powdercoat colours listed, with custom colour optional.

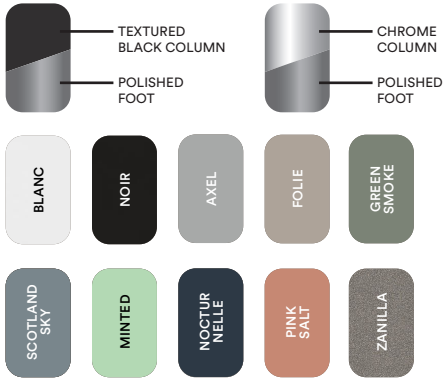

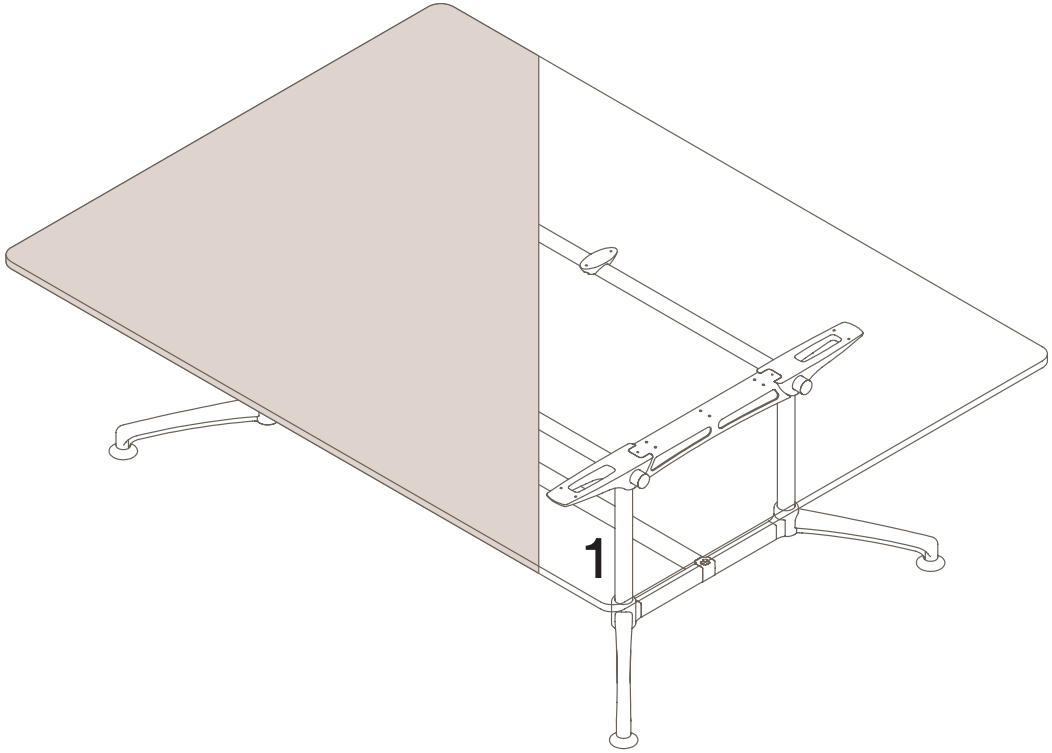

Colours are representative only, please check with your Thinking Works consultant to view samples of any specific colour.

sof
sydney office furniture

Tables
Rectangle

Materials Information

Leg Finish
Steel Leg Column

a. Textured Black (standard)
b. Chrome (standard)
c. Blanc
d. Noir
e. Axel
f. Folie
g. Green Smoke
h. Scotland Sky
i. Minted
j. Nocturnelle
k. Pink Salt
l. Zanilla

Foot Finish
Aluminium Foot

a. Polished (standard)
b. Powdercoat (to match column)

Frame Finish
Polished Aluminium Top Horn
Steel Black Powdercoat Rails

I-1040

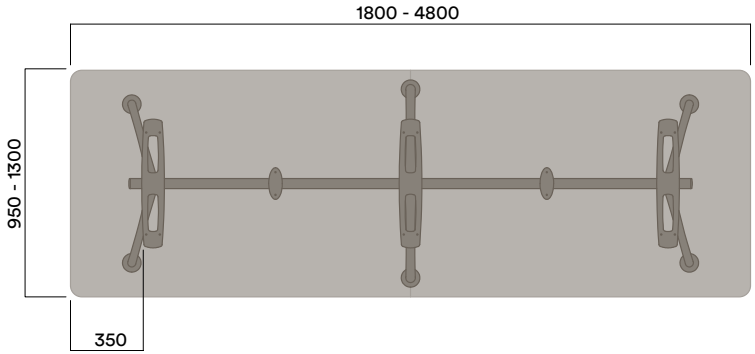

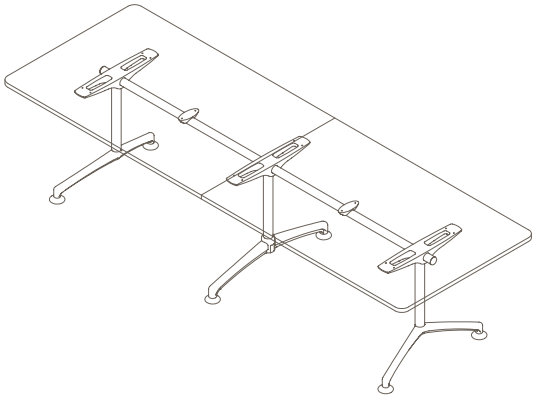

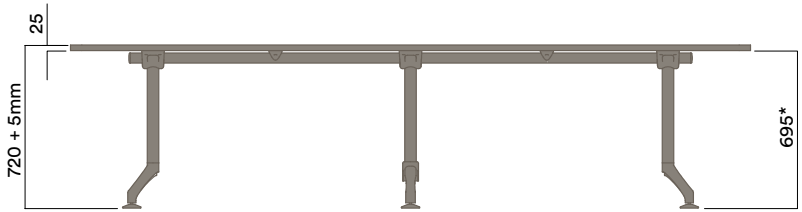

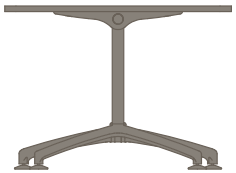

I-1041

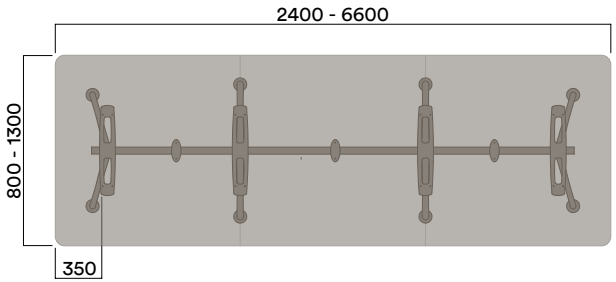

* Maximum Custom Height	1000mm
Maximum inc. worktop	130kg
Maximum Point Load	50kg
Seats	6-18

sof
sydney office furniture
www.sydneyofficefurniture.com.au

Tables
Features

Materials Information

Frame Finish
Steel Slingshot

a. Powdercoat (to match frame)

Steel Power/Data Beam

a. Black Powdercoat

Powerbox Slingshot
Suitable for I-1040 and I-1041 table frames

Replaces I.AM leg column to provide placement of powerboxes without frame interference

Made to order to cater for specified powerbox requirements and size

Provides 75mm clearance around powerbox to ensure fitment without frame interference

Power/Data Beam
Suitable for I-1000, I-1001 and I-1002 frames

Suitable for I-1010, I-1011 and I-1012 frames

Replaces central rail to provide placement of powerboxes without frame interference

Made to order to cater for specified powerbox requirements and size

Provides 50mm clearance around powerbox to ensure fitment without frame interference

Powerbox Management Slingshot

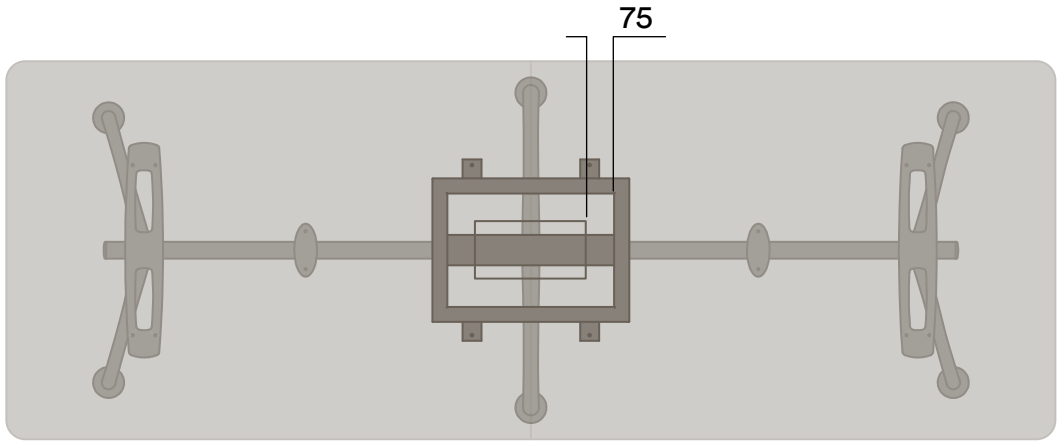

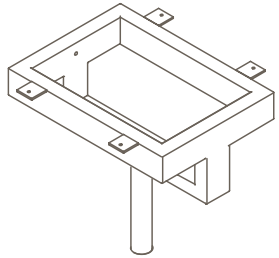

Powerbox Management Power/Data Beam

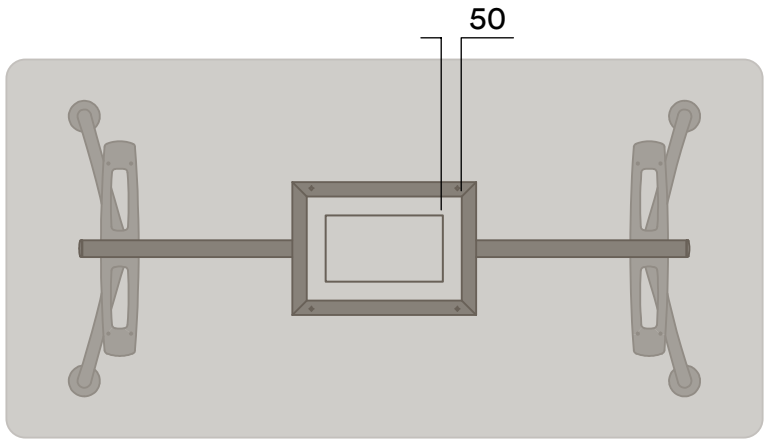

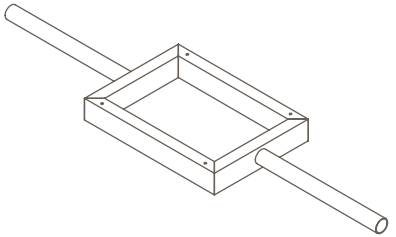

sof
sydney office furniture
www.sydneyofficefurniture.com.au